8835847COM - Nesting Tables

Finish: Blonde Oak

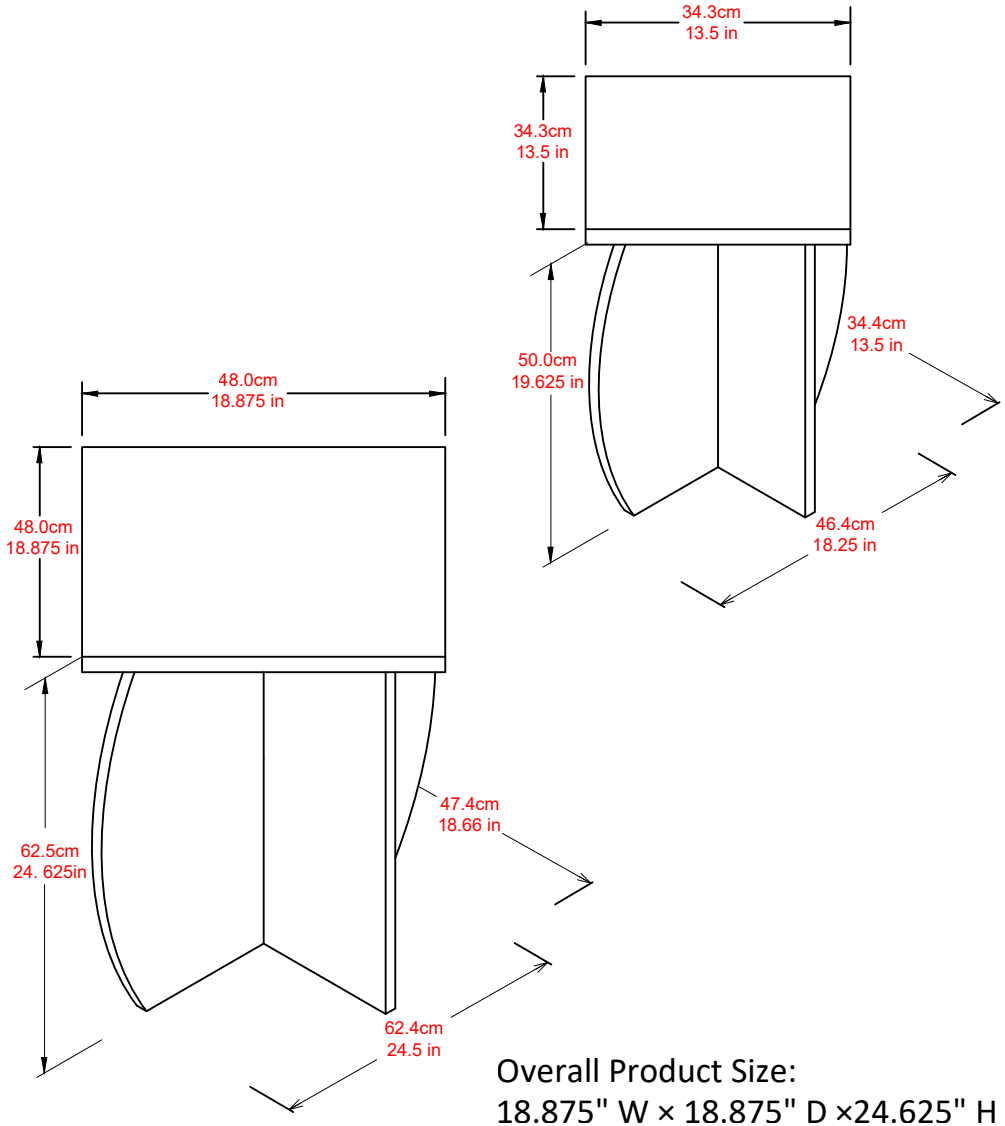

Overall Product Size:
18.875" W × 18.875" D ×24.625" H
48.0cm W ×48.0cm D × 62.5cm H
13.5" W × 13.5" D ×19.625" H
34.3cm W ×34.3cm D × 50.0cm H

Wood Breakdown:
PB 100%,
Total storage: 3.7 cubic feet

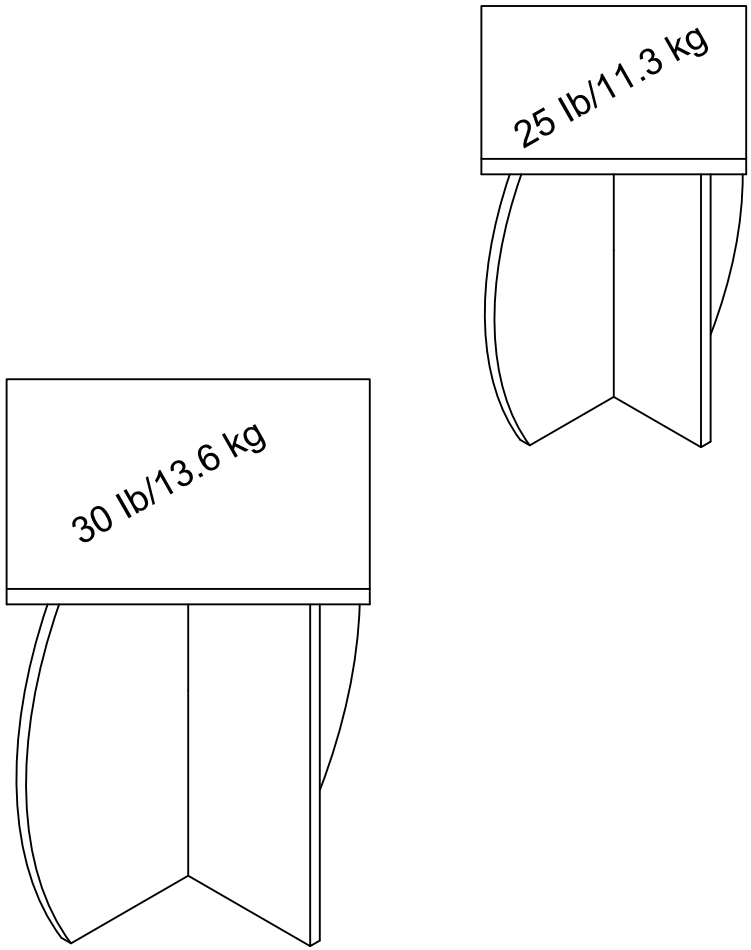

Maximum Weight Capacities
Unit Weight: 41.5lbs. (18.9kg)